INTERPUMP GROUP

Pratissoli

Series 71 pump reduction gear unit

Use, maintenance, repair and installation

TABLE OF CONTENTS

1. INTRODUCTION **3**

2. SYMBOLS USED **3**

3. SAFETY **3**

4. CHOICE OF REDUCTION GEAR UNIT **3**

4.1 Identification of the pump 3
4.2 Identificazione of the reduction gear unit 4
4.2.1 Gear ratio 4

6. DIMENSIONS AND WEIGHTS **5**

7. INSTRUCTIONS FOR USE **5**

7.1 Lubricating oil 5
7.2 Connection to the reduction gear unit 6
7.3 Direction of rotation 6

8. INSTALLING THE REDUCTION GEAR UNIT **7**

8.1Choice of drive position 7
8.2 Installation of the reduction gear unit 7

9. DISMANTLING THE REDUCTION GEAR UNIT **10**

10. SCREW TIGHTENING TORQUES **11**

11. TOOLS TO BE USED FOR REPAIRS **11**

12. CONDITIONS OF GUARANTEE **11**

13. EXPLODED VIEW AND LIST OF PARTS **12**

1. INTRODUCTION

This manual provides instructions for use, maintenance and repair of the speed reduction unit for series 71 pumps and must be read carefully before the pump is installed and used.
Unless otherwise stated, reference should be made to the specific manual for each pump.
The regular functioning and working life of the pump require that the latter be used and maintained correctly.
Interpump Group will accept no responsibility for damage caused by negligence or by failure to abide by the specifications given in this manual.
On receiving the reduction gear unit, check that it is complete and report any irregularities before installing it on the pump.

2. SYMBOLS USED

Warning

Consult this manual carefully before proceeding with each operation.

3. HEALTH & SAFETY

Improper use of the pumps and high pressure systems, and refusal to comply with regulations for installation and maintenance, may lead to serious damage to persons and/or objects. Personnel who either install or use high pressure systems must have the required qualifications, must know the characteristics of the components to be assembled or used and, finally, must adopt all precautions necessary to ensure maximum safety under any type of operating conditions. In the interests of safety, no reasonable precaution should be omitted either by the installer or the operator.

4. CHOICE OF REDUCTION GEAR UNIT

4.1 Identification of the pump

Note the r.p.m given on the plate in Fig.1, position ②.

The plate also gives the model, version and serial number which, together with the serial number to be found on the side of the crankcase (Fig.1, position ①), must always be specified when ordering parts.

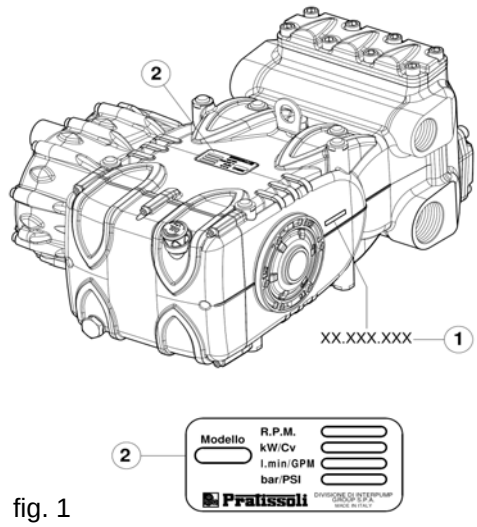

fig. 1

4.2 Identification of the gear unit

The unit can be identified by the τ legible on the outside of the housing.
The plates indicating the gear ratio and the direction of rotation are affixed (see Fig.2).

The plate giving the direction of rotation is present if the gear unit is supplied with the pump. Conversely, it must be affixed by the user and include the direction of rotation given in section 7.3 below.

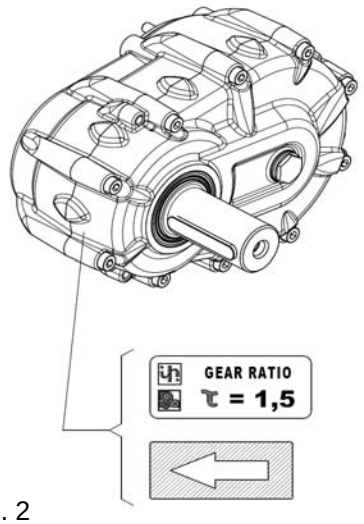

fig. 2

4.2.1 Gear ratio

The reduction gear unit is available in three different ratios:

τ = 1.25

τ = 1.5

τ = 1.83

4.2.2 On-the-job test

The maximum rated r.p.m. of the pump must never be exceeded.

Example:

Pump KF40
Max. rated r.p.m. 900G/1' (as per the plate.)
Input speed to the gear PTO 1500 G/1' (set by the user)

In this case the only ratio possible which does not exceed the maximum pump rated r.p.m. is: **τ = 1.83**
In as much as: **1500 g/1': 1.83 = 819.7 G/1'**

6. DIMENSIONS AND WEIGHTS

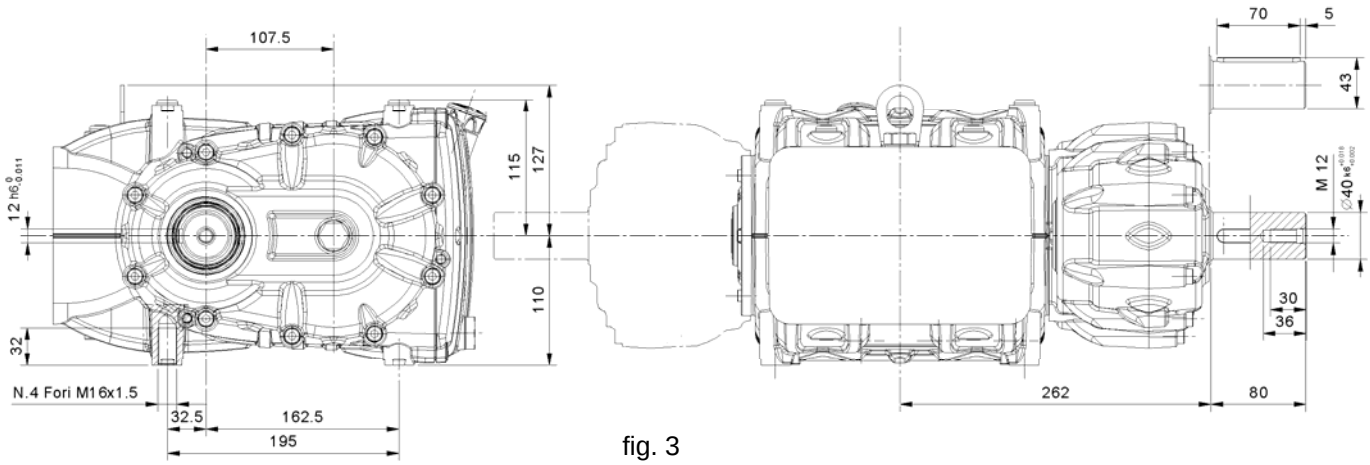

fig. 3

The dry weight of the gear unit is 14 Kg

7. INSTRUCTIONS FOR USE

7.1 Lubricating oil

After the gear unit has been installed, the prescribed volume of pump oil must be increased by
~ 0.4 L.
Check the level using the dipstick shown in Fig.4, position ①.

Oil checks are best carried out with the pump at room temperature and in a perfectly horizontal position.
The oil must be changed when the pump is at operating temperature.
To drain the old oil, remove the dipstick (Fig.4, position ①) and then the cap (Fig.4, position ②).

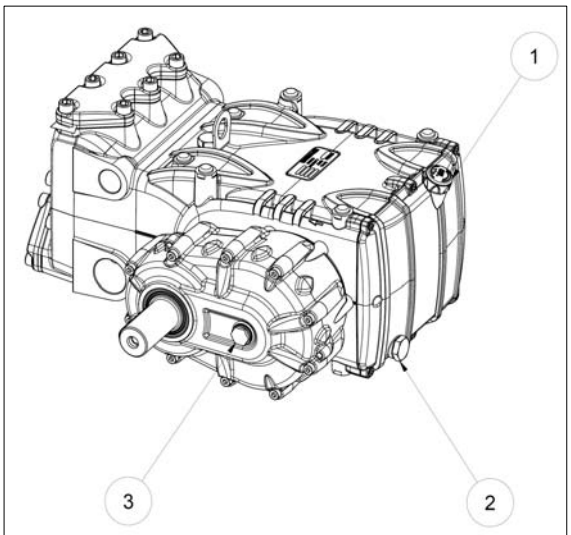

fig.4

The oil must be poured into an appropriate container and disposed of in the correct manner.
Under no circumstances should it be dispersed into the environment.

In order to confirm the removal of the seal ring as shown below in section 8.2, Fig. 7 and Fig. 8, the oil level must also be visible on the gauge (Fig. 4, position ③).

7.2 Connection to the gear unit

The gear unit PTO drive shaft must not be rigidly attached to the engine.
The following types of drive are recommended:
- with flexible joint;
- Cardan (please follow the maximum operating angles recommended by the manufacturers);
- hydraulic, by means of a flange (for correct installation request assistance from the ***Technical Office or*** from the ***Customer Assistance Service***).

Belt transmission is prohibited.

7.3 Direction of rotation

The direction of rotation of the pump is indicated by an arrow found on the crankcase and should always be followed.
When facing the pump head, the direction of rotation of the drive should be:
- as per Fig. 5 for versions without reduction gear unit;
- as per Fig. 5a for versions with reduction gear unit.

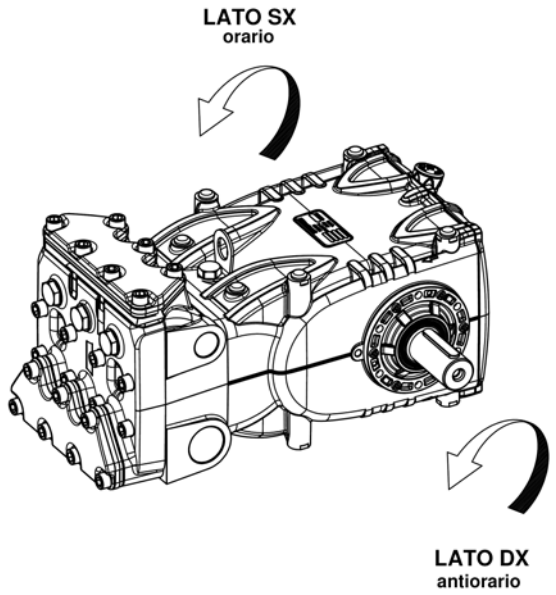

fig. 5

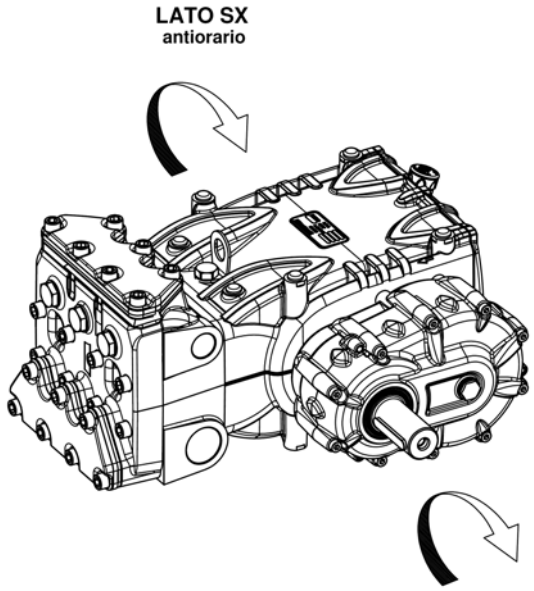

fig. 5a

8. INSTALLING THE REDUCTION GEAR UNIT

The pump version can be modified only by qualified and authorised personnel

8.1 Choice of drive position

Depending on specific needs, before installing the gear unit it is wise to define the drive position, choosing from among the four available (D1, D2, D3, D4 for right-hand pumps, or S1, S2, S3, S4 for the left-hand pumps), as per Fig. 6.

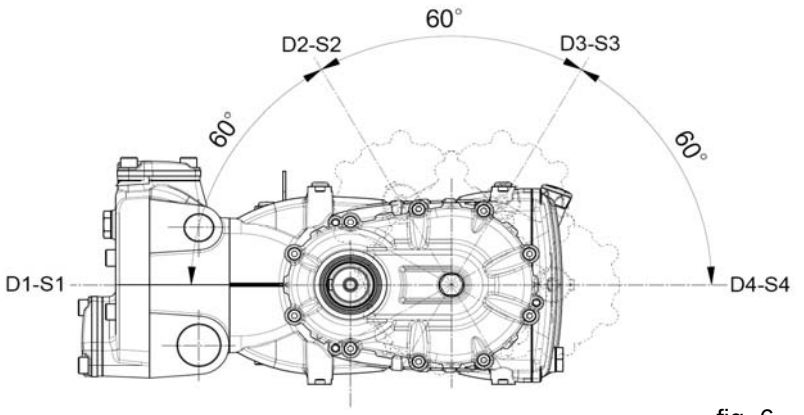

fig. 6

8.2 Installing the reduction gear unit

Before installing the reduction gear unit, remove the pump shaft oil seal (Fig. 8, position ①) and insert the ∅8 pin into the crankcase (Fig. 8, position ②).
See also the drawing given in Fig. 7. Then proceed with the operations described:

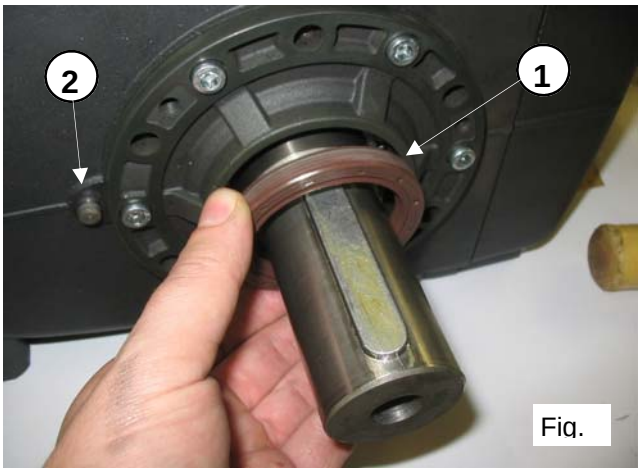

Fig.

Omission of the operations described may compromise pump performance and operator safety.

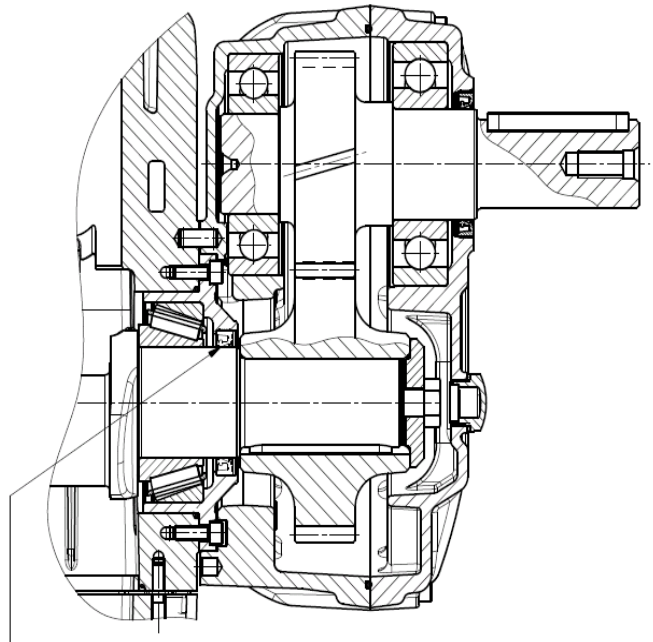

PRIMA DI INSTALLARE IL GRUPPO RIDUTTORE SI RACCOMANDA DI RIMUOVERE L'ANELLO DI TENUTA ROTANTE SULL'ALBERO POMPA

IT IS RECOMMENDED TO REMOVE THE SEAL ON THE PUMP SHAFT BEFORE FITTING THE REDUCTION GEAR

fig. 7
(Code no.10970600)

Insert the packing (Fig. 9) and assemble the gear housing, taking care to fit the hole onto the appropriate pin present on the crankcase (Fig. 10, position ①).

fig. 9

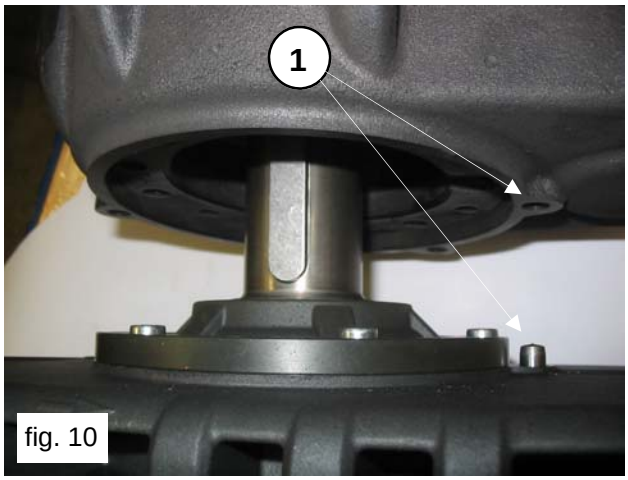

fig. 10

Fasten the gear housiong with the 6 M8x50 screws and tighten the latter with a torque wrench (Fig.11, and 12) as indicated in section 10 below.

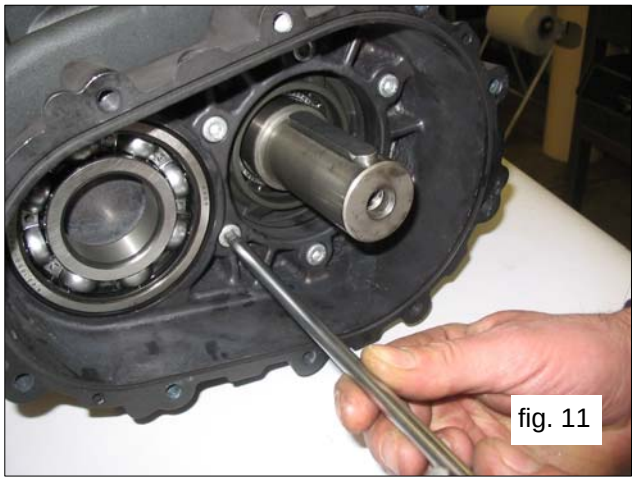
fig. 11

fig. 12

Insert the crown into the pump shaft, apply the washer and use the wrench (Fig.13) to tighten the screws to the torque level indicated in section 10.
Fix the two ∅5 pins to the gear housing (Fig. 14, position ①).

fig. 13

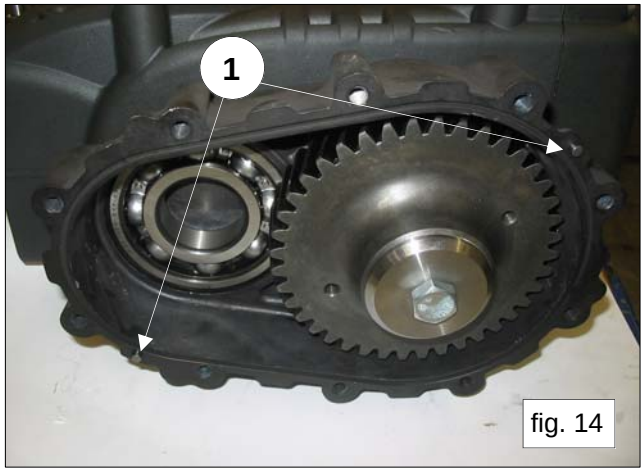

fig. 14

Mount the bearing onto the pinion, pushing it as far as possible into the housing socket using a striking hammer (Fig.15). Bearings and crown can be cold-inserted (Fig.15). The operation can be facilitated by heating the parts in question to a temperature of between 120° - 150°C (250° - 300°F), ensuring that the ring nuts are fitted snugly into their housings.
Fix the O-rings into the appropriate slots in the reduction gear unit (Fig.16).

fig. 15

fig. 16

Place the cover over the pinion bearing using two M8 screws or grub screws to keep it in position during assembly (Fig.17, position ①). Abut the cover with the housing using a buffer and pressing directly on the former. Alternatively, use tool code number 27517400 (Fig.18). The operation can be made easier by tightening several screws at once (Fig.17, position②).

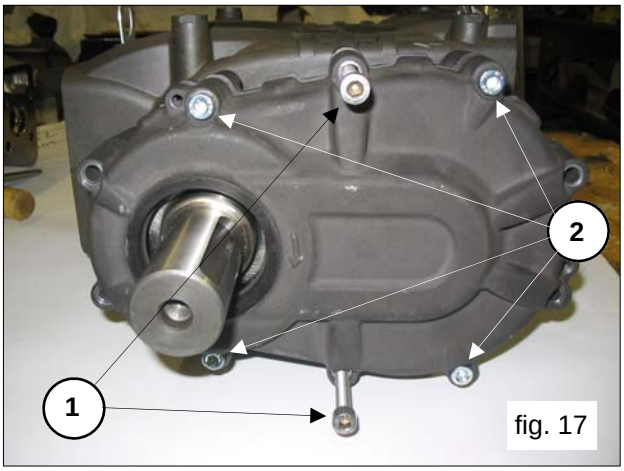

fig. 17

fig. 18

Affix the gear unit housing lid with 10 M8x50 screws and tighten with a torque wrench (Fig. 19), as shown in section 10.

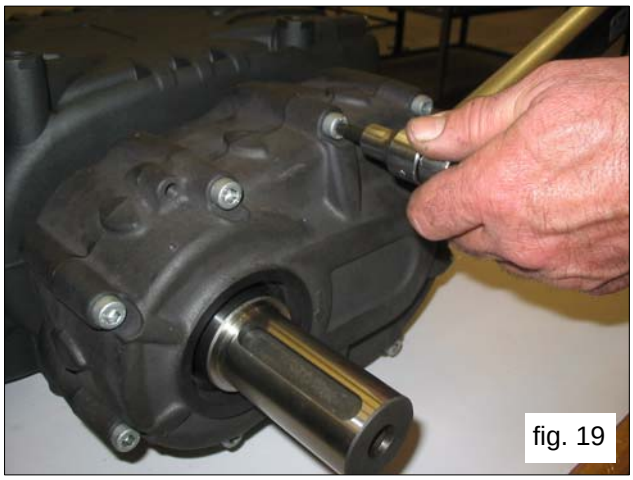
fig. 19

When the complete reduction gear unit has been installed, check that the pinion is turning correctly.

9. DISMANTLING THE REDUCTION GEAR UNIT

Remove the gear housing lid screws. Place 3 M8 grub screws or threaded screws (which will have with the function of extractors) into the holes and tighten (Fig.20, position①) and at the same time strike on the pinion so that the bearing remains attached to it during removal of the lid (Fig. 21).

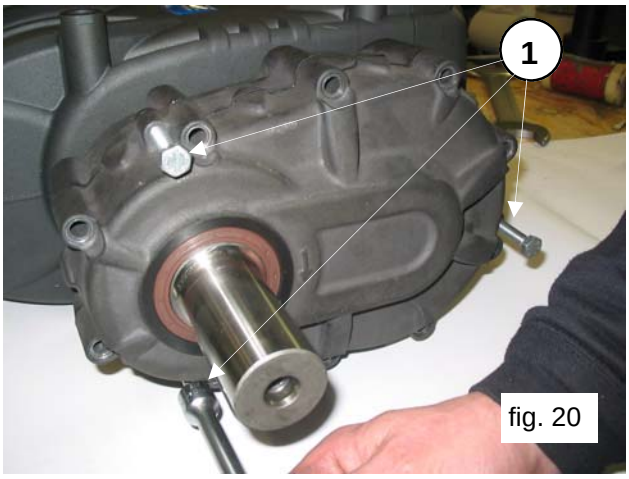

fig. 20

fig. 21

Using standard tools, remove the gear housing lid and take the bearing out of the pinion (Fig.22).
Remove the crown screws and washer and extract out the crown. If necessary, use a percussion extractor on the two M8 holes (Fig. 23, position) or a standard extraction tool (Fig.23).

fig. 22

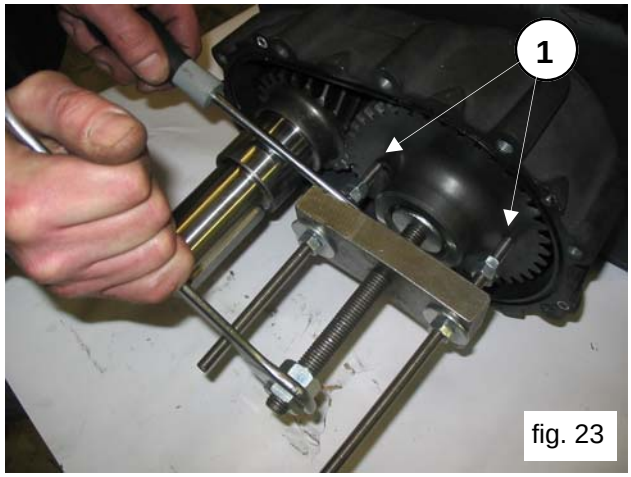

fig. 23

Remove the pinion using a percussion extractor on the M12 hole (Fig.24).
Loosen the gear housing screws and remove the housing (Fig.25).

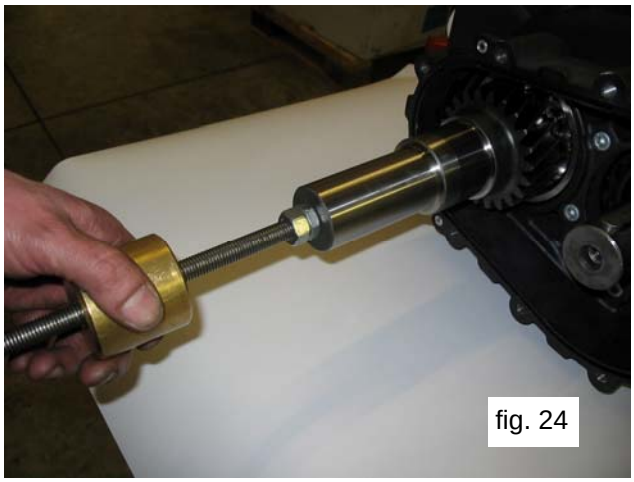
fig. 24

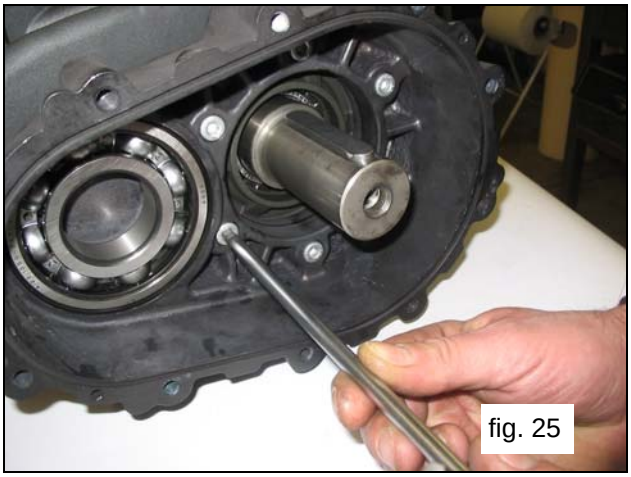
fig. 25

10. SCREW TIGHTENING TORQUES

DESCRIPTION	POSITION IN EXPLODED DRAWING	TORQUE Nm
Housing/lid screws	6	40
Crown screws	9	70

11. TOOLS TO BE USED FOR REPAIRS

Pump repairs can be facilitated by using the appropriate tools, codes for which are given below:

For assembly:

Pump shaft/gear pinion oil seal buffer	code no. 27904800
Buffer for gear unit housing lid	code no. 27517400

12. CONDITIONS OF GUARANTEE

The conditions of guarantee for the reduction gear unit fall under the general conditions for the pump.

13. EXPLODED VIEW AND LIST OF PARTS

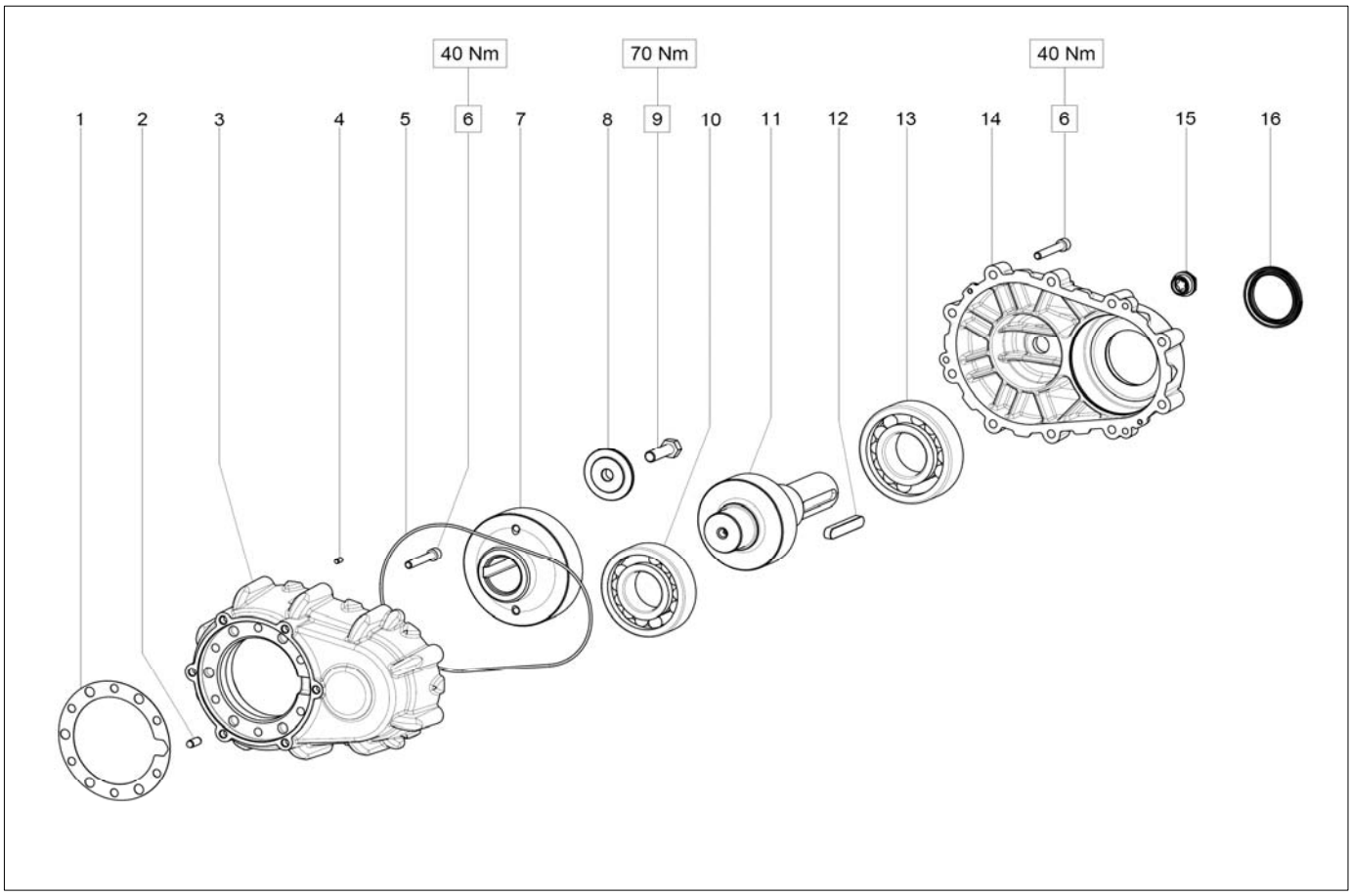

POS.	CODE NO.	DESCRIPTION KIT	Qty. PCS.
1	**72.2107.84**	**Gear housing packing**	**1**
2	**97.6185.00**	**Straight pin Ø8x10 UNI1707**	**1**
3	**72.2108.20**	**Gear housing**	**1**
4	**97.6152.00**	**Straight pin Ø5x10 UNI1707**	**2**
5	**90.3948.00**	**O-ring Ø209.22x2.62 (3825)**	**1**
6	**99.3146.00**	**TCEI M8x50 UNI5931 screws**	**16**
7	10.0711.35	Z34-1500 helical crown	1
	10.0712.35	Z37-1800 helical crown	1
	10.0713.35	Z40-2200 helical crown	1
8	**72.2110.55**	**Crown fixing washer**	**1**
9	**99.4307.00**	**TE M12x40 UNI5737 screws**	**1**
10	**91.8577.00**	**45x100x25 6309 SKF ball bearing**	**1**
11	10.0708.35	Z27-1500 helical pinion	1
	10.0709.35	Z25-1800 helical pinion	1
	10.0710.35	Z22-2200 helical pinion	1
12	**91.5000.00**	**12x8x70 UNI6604 tongue**	**1**
13	**91.8593.00**	**50x110x27 6310 SKF ball bearing**	**1**
14	**72.2109.20**	**Gear housing lid**	**1**
15	**97.5940.00**	**G1/2" oil level gauge**	**1**
16	**90.1700.00**	**Ø50x65x8 ring**	**1**

Copyright

These operating instructions are the property of the Interpump Group.
They contain technical instructions and illustrations which may not be copied electronically, reproduced wholly or in part or passed on to third parties in any form without the written permission of owner.

Offenders will be prosecuted.

Cod. 71981203 rev.0 - Cod.IE 2860000028 – 04/07/2008
I dati contenuti nel presente documento possono subire variazioni senza preavviso.

INTERPUMP GROUP S.p.A.
42049 S.ILARIO - REGGIO EMILIA (ITALY)
Tel. ***+39 - 0522 - 904311*** Fax ***+39 - 0522 - 904444***
E-mail: info@interpumpgroup.it
http://www.interpumpgroup.it.